UK SINGLE PORT GIGABIT POE INJECTOR, 15 W



Technical data

Input voltage	100 - 240 VAC
Input frequency	50 / 60 Hz
Input current	0.5 A
PoE Port Power	15.4 W
Total Power	18 W
PoE output voltage	52 VDC
PoE output current	0.35 A
PoE method	Active
PoE standards	IEEE 802.3af
PoE mode, pinout	Mode A, 1 / 2 (+), 3 / 6 (-)
Input ethernet data connector	1 x RJ45
Output ethernet data + PoE connector	1 x RJ45
Data rate	10 / 100 / 1000 Mbps
MTBF	100 000 hours
Power input connector	UK (Type G)
Weight	420 g
RoHS	✓
Certification	Safety: EN 62368-1:2014+A11:2017; BS 1363-1:2016+A1:2018; SS 145-1:2010

Copyright © 2026, UAB TELTONIKA NETWORKS.
Specifications and information given in this document are subject to change by UAB TELTONIKA NETWORKS without prior notice.

Spatial measurements

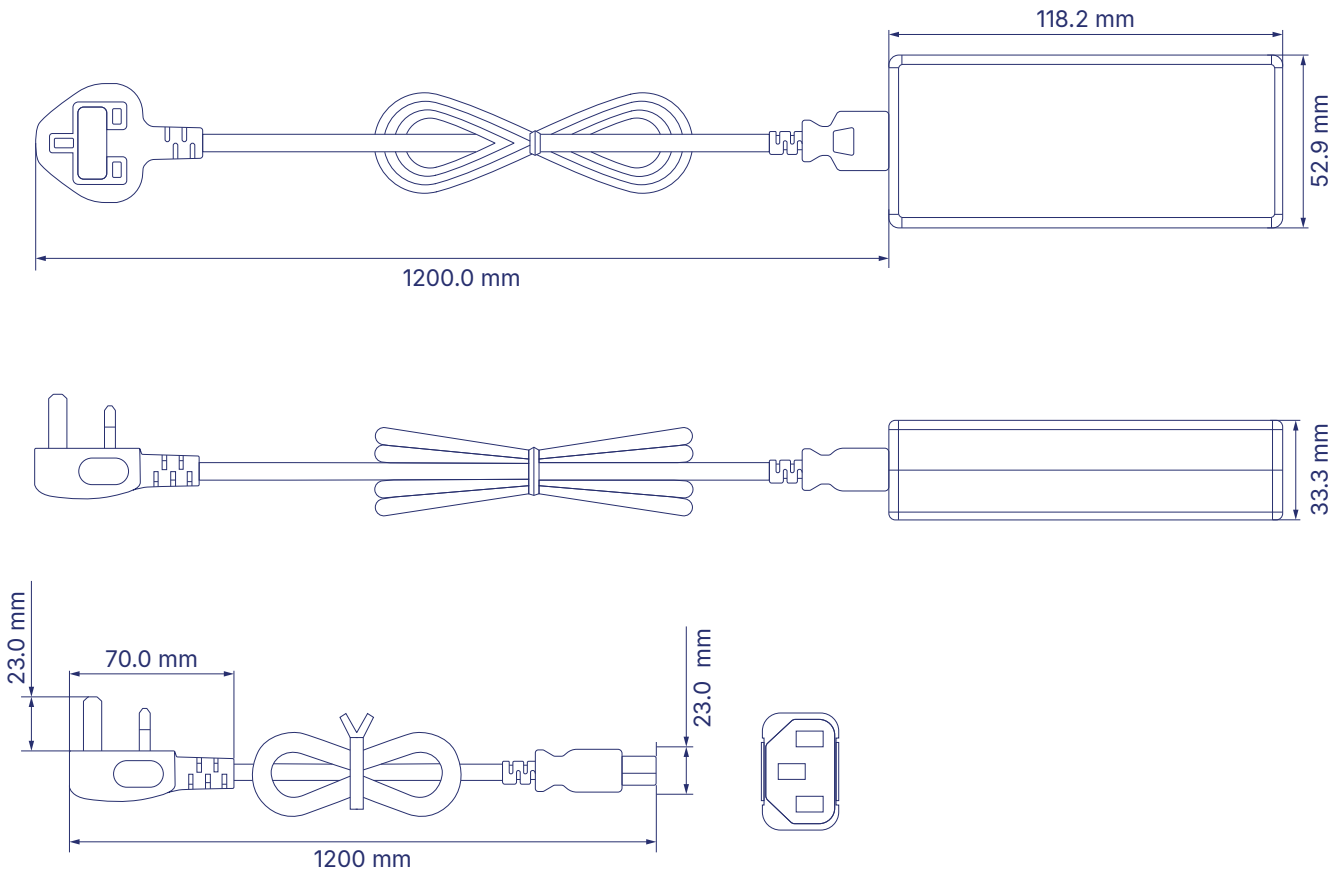

Copyright © 2026, UAB TELTONIKA NETWORKS.
Specifications and information given in this document are subject to change by UAB TELTONIKA NETWORKS without prior notice.